WORLD TRADE CENTER

1 World Trade Center, Suite 35 North
New York, NY 10048 0682
212 435 2227
212 435 2016 Fax

Physical Facilities

CONFIDENTIAL AND PRIVILEGED INFORMATION

May 5, 1993

Mr. Michael Isner, Fire Protection Engineer
National Fire Protection Association
1 Batterymarch Park
P.O. Box 9101
Quincy, MA 02269-9101

Dear Mr. Isner:

I am enclosing additional information from the World Trade Center Emergency Power Distribution System O & M manual as we discussed. This should more clearly illustrate the two and three circuit emergency power circuits in place on February 26, 1993.

If you have any additional questions, please call me on 1-212-435-8511.

Sincerely,

Alan L. Reiss
Special Assistant to the Director
The World Trade Center

Enclosure

bcc: R. DiChiara, N. Chanfrau

CHAPTER 4

EMERGENCY POWER DISTRIBUTION

SCOPE

This chapter describes distribution of emergency power from the generator bus to the Emergency Power Centers (EPC's). These centers are located on the same floors as the Mechanical Equipment Rooms (MER's) of the North and South Towers. In addition, EPC's are located in the N.E. and S.E. Plaza Buildings, and the U.S. Customshouse. Detailed schedules of both the ACB's and Automatic Transfer Switches (ATS's) are also included in this chapter.

SYSTEM DESCRIPTION

Power Distribution

General. Power to all emergency circuits is distributed from ACB's located in the Left and Right Main Distribution Boards. See Figure 3.12. These boards are manufactured by Royal Switchboard Co. of Brooklyn, N.Y.

Distribution System. The five emergency generators feed onto the bus of the Left and Right Main Distribution Boards. See Figure 3.12. From here power is fed to Emergency Panels ESB-A, ESB-B, ESB-C, ESB-D, ESB-E, ESB-F, ERP-G, and DPG-A. These panels are located behind the Engine-Generator and Master Control Panels. See Figure 4.1. From panels ESB-B and ESB-C power is fed to the EPC's of the N.E. and S.E. Plaza Buildings, the U.S. Customshouse, and subgrade levels of the North and South Towers. From the Left and Right Main Distribution Boards power is fed directly to the EPC's of the North and South Towers. See Figure 3.12.

Power Protection. The emergency power circuits are protected by overload and ground fault protective devices incorporated into the main distribution ACB's. The operation of the ACB via these protective devices is described in Chapter 3.

Emergency Panels. See Figure 4.2. Panel ESB-A is normally fed from Substation 294-B via panel DPG-A and contacts 5 of ATS-G3. When normal power fails the emergency power generators feed panel ESB-A via ACB ESB-A, and contacts 6 of ATS-G3 (contacts 6 of ATS-G3 close and contacts 5 of ATS-G3 open when the generator power energizes ATS-G3). Panel ESB-F has a normal, an alternate, and an emergency feed. The normal feed is from feeder 294-A via ATS-G1. When the normal power fails, the alternate power source is feeder 294-B via ATS-G2 and ATS-G1. When both normal and alternate power fail then emergency power energizes ATS-G1 and ATS-G2. Consequently contacts 1 of ATS-G2 open and contacts 2 close. Also contacts 4 of ATS-G1 open and contacts 3 close. Hence power from ACB ESB-F goes through contacts 2 (ATS-G2) and contacts 3 (ATS-G1) and feeds panel ESB-F. Panel LP-ERP is fed from panel ESB-F via transformer ER1. Panels ESB-D and ESB-E provide emergency power to the Honeywell air compressors, the sewage ejector, and the sump pumps of the World Trade Center complex. Figures 4.3A and 4.3B provide a detailed schedule of the Emergency Panels.

EMERGENCY POWER CENTERS

General

An Emergency Power Center (EPC) is a unit comprising an ACB or ACB's and two automatic transfer switches (ATS's), and which together form part of the emergency lighting circuit. The
the lighting circuits provides alternate and emergency power if normal power to the lighting fails. The ATS related to the elevator circuits provides only emergency power if normal source fails and is located in substations, on the same floor as the EPC

unit. Emergency power to both the lighting and elevator circuits is controlled by the ACB's in the EPC unit. The Emergency Power Centers are located in electrical closets in the MER's of the North and South Towers. EPC's are also located in subgrade levels of the North and South Towers, Elevation 294'. The EPC's in the subgrade levels are located in Substation 294A (for the North Tower) and Substation 294B (for the South Tower). The EPC's in the N.E. and S.E. Plaza Buildings are located in their respective substations as well.

EPC Sources. The power to the EPC's originates from the Left and Right Main Distribution Boards. See Figures 3.9 and 3.10. The power is then distributed to the Emergency Panels, to emergency lighting and elevator loads (EPC's of the Towers), and the essential equipment. See Figure 3.12 and table on page 4-4. Feeders ESB-8 and ESB-11 from the Main Distribution Boards provide the power to all the EPC emergency lighting panels in the North and South Towers. Feeders ESB-7 and ESB-10 provide power to all the EPC elevator loads in the North and South Towers. See Figures 4.4 and 4.5. Emergency Panel ESB-B feeds the EPC's of the N.E. and S.E. Plaza Buildings as well as the Customshouse and the Hotel. See Figure 4.6. Emergency Panel ESB-C provides power to the EPC's in the below grade levels of both the North and South Towers. See Figures 4.7 and 4.8.

EPC Description. The EPC consists of a two section panel. One section is known as the "main section" and contains the ACB/ACB's. The other section is called the "transfer section" and consists of two automatic transfer switches, wired so as to provide a 3-source (normal, alternate and emergency) arrangement. (See Chapter 5 for a complete description of the ATS's.) For EPC's at the subgrade levels, the 7th Floor MER, and at the Plaza Buildings the main section consists of one ACB located at the upper part of the EPC. For the EPC's in the remainder of the towers, the main sec-

	Feeder Des.	ACB No.of Poles	ACB Trip Rating (A)	Service	Remarks
Left Section of Switchboard	F-ESB-10	3	1600	Tower A	Via EPC 41A, EPC 75A, & EPC 108A
	F-ESB-3	3	600	Fire Pumps Towers A&B At 294' Elev.	
	F-ESB-26	3	400	Emergency Distribution Panel ESB-D	Via TS-ASL & TS-BSL
	F-ESB-27	3	400	Emergency Distribution Panel ESB-E	
	F-ESB-11	3	1000	Tower A lighting & Fire Dept. Elevator #50 (FDE)	Via EPC 7A, EPC 41A, EPC 75A, EPC 108A, EPC 110A
	F-ESB-28	3	150	Emergency Distribution Panel ESB-F	
Right Section of Switchboard	F-ESB-7	3	1600	Tower B Elevators	Via EPC 41B, EPC 75B, & EPC 108B
	F-ESB-6	3	600	Fire Pump 41st Fl. Towers A & B	Via TS-41SL & TS-41EL
	F-ESB-30	3	800	Emergency Distribution Panel ESB-C	
	F-ESB-1	3	500	Emergency Distribution Panel ESB-A	
	F-ESB-14	3	200	Sprinkler Pump Tower A	Via ATS - SL
	F-ESB-8	3	1000	Tower B lighting & Fire Dept. Elevator #50 (FDE)	Via EPC 7B, EPC 41B, EPC 75B, EPC 108B, EPC 110B
	F-ESB-24	3	1000	Emergency Distribution Panel ESB-B	

tion, which is located at the right hand half of the panel, consists of either three or four ACB's. See Figures 4.9 and 4.10. These ACB's control the lighting and elevator ATS's.

EPC Equipment

Air Circuit Breaker. These molded case ACB's are manufactured by Federal Pacific and with ratings as shown on the schedules in Figures 4.11, 4.12, 4.13. These schedules show the ACB designations and ratings as well as the equipment they serve. The ACB designations on these schedules follow the ACB designations in Figures 4.4 through 4.8. The schedules are for the EPC's in the North and South Towers and the N.E. and S.E. Plaza Buildings.

Automatic Transfer Switch (ATS). There are basically two circuit arrangements of the ATS. The ATS circuit is either installed within the EPC (see Figure 4.9) and controls the lighting, or mounted separately in a cabinet (see Figure 4.10) and controls the shuttle elevator circuits. All these ATS's are manufactured by ASCO and are rated as shown in Figures 4.14, 4.15, 4.16. The designations of the ATS are in line with the ones used in Figures 4.4 through 4.8. In these schedules, which cover all the ATS's in the North and South Towers and the N.E. and S.E. Plaza Buildings, the ATS's that are part of the EPC are described under the column 'enclosure' as 'common to transfer section of panel'. The ATS's that are separately mounted are described as 'separate floor mounted cabinet'. The schedule also lists the location of the ATS (i.e. whether located in an EPC or in a substation) and its capacity. Figures 4.17 and 4.18 illustrate the feeds of all the automatic transfer switches located in the EPC's of both the North and South Towers as well as their respective subgrades. Figures 4.19 and 4.20 provide information on manual transfer switches (TS) located in the subgrades and in the 41st floor EPC of the North and South Towers. The ATS that are part of the lighting panels and Fire Department Elevator provide both an alternate and emergency source of power when normal power fails.

However, the ATS associated with the elevator panels provides only an emergency power source during normal power failure. See Figures 4.11 and 4.21.

Lighting Transformers. The 150 KVA, 480-208/120V, 3Ø, 60 Hz lighting transformers and their associated disconnect switches are located one floor above the EPC of the 7th and 41st floors of the towers. The electrical closets in which the lower floor ECP's are located do not have sufficient space for additional electrical units to be installed. However, the electrical closets in the 75th and 108th floors of the towers are sufficiently large to accommodate the lighting transformers and their associated disconnect switches.

Disconnect Switch 110A1 and 110B1. See Figures 4.4 and 4.5. These switches are manufactured by Federal Pacific with ratings and descriptions as shown in Figures 4.11 and 4.12. These switches are unfused and are similar to the disconnect switches associated with the lighting transformers.

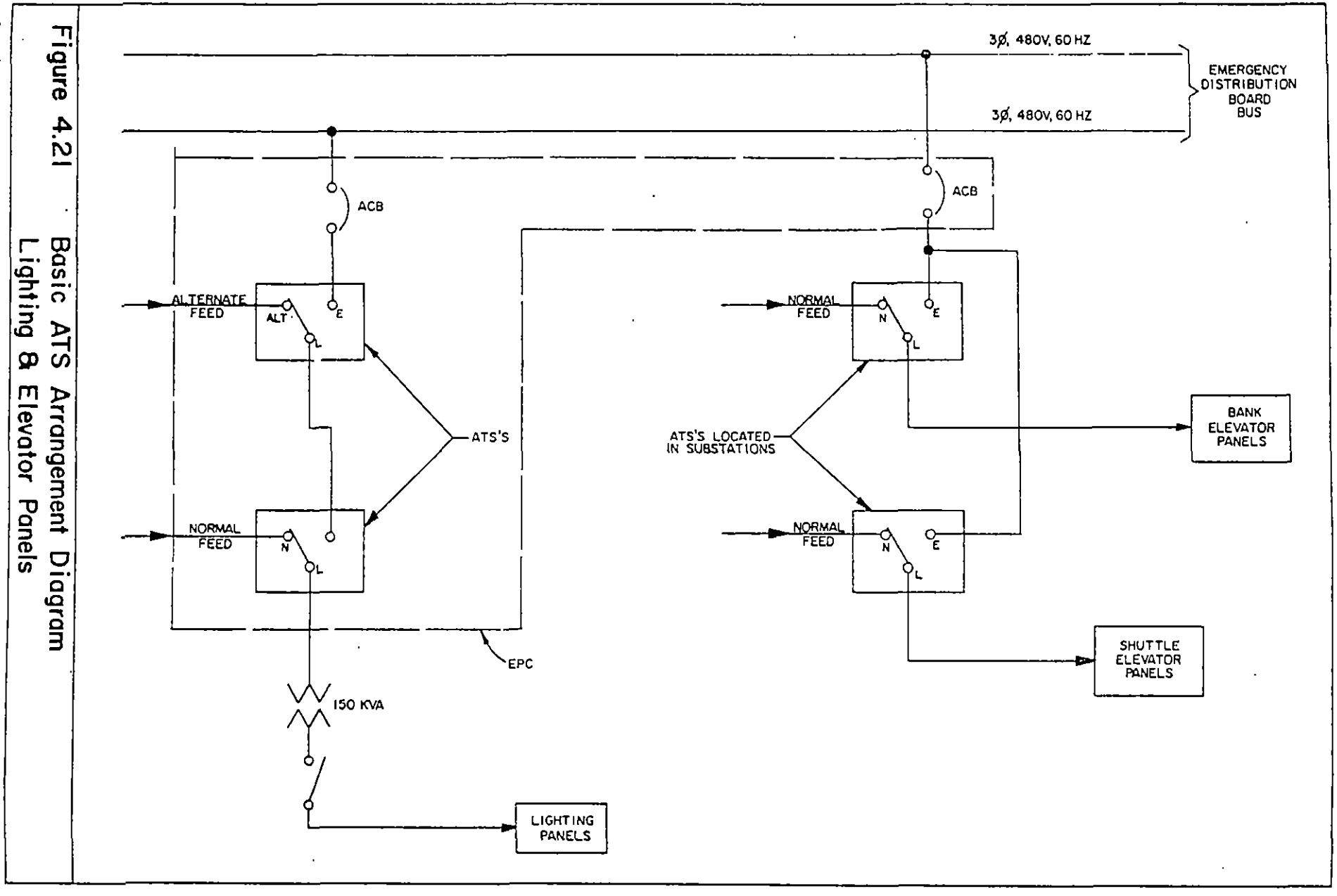

Figure 4.21 Basic ATS Arrangement Diagram
Lighting & Elevator Panels

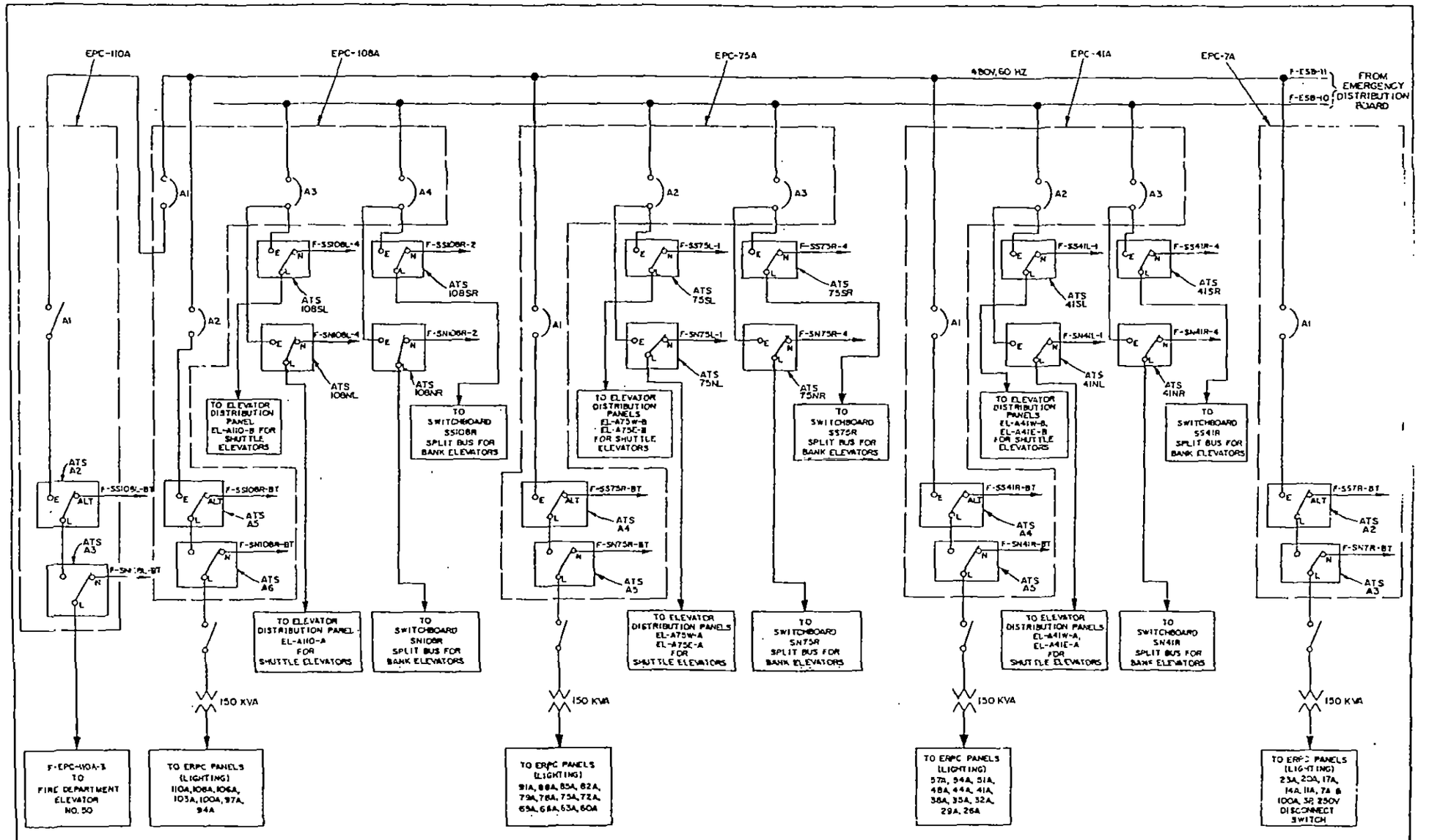

Fi 4.4 Lighting & Elevator Loads
Emergency Power Centers (EPC) — North Tower

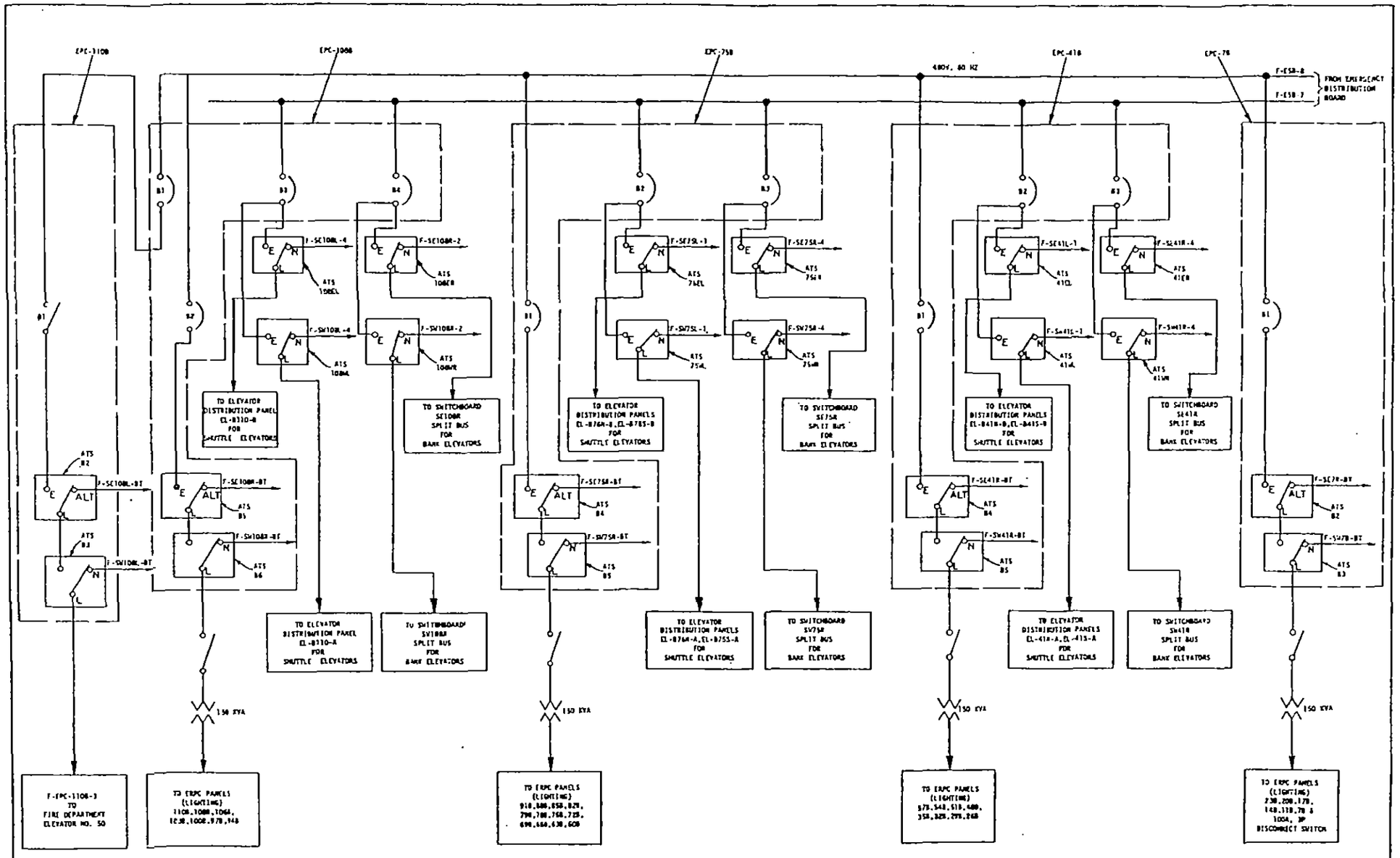

ure 4.5 Lighting & Elevator Loads
Emergency Power Centers (EPC) — South Tower

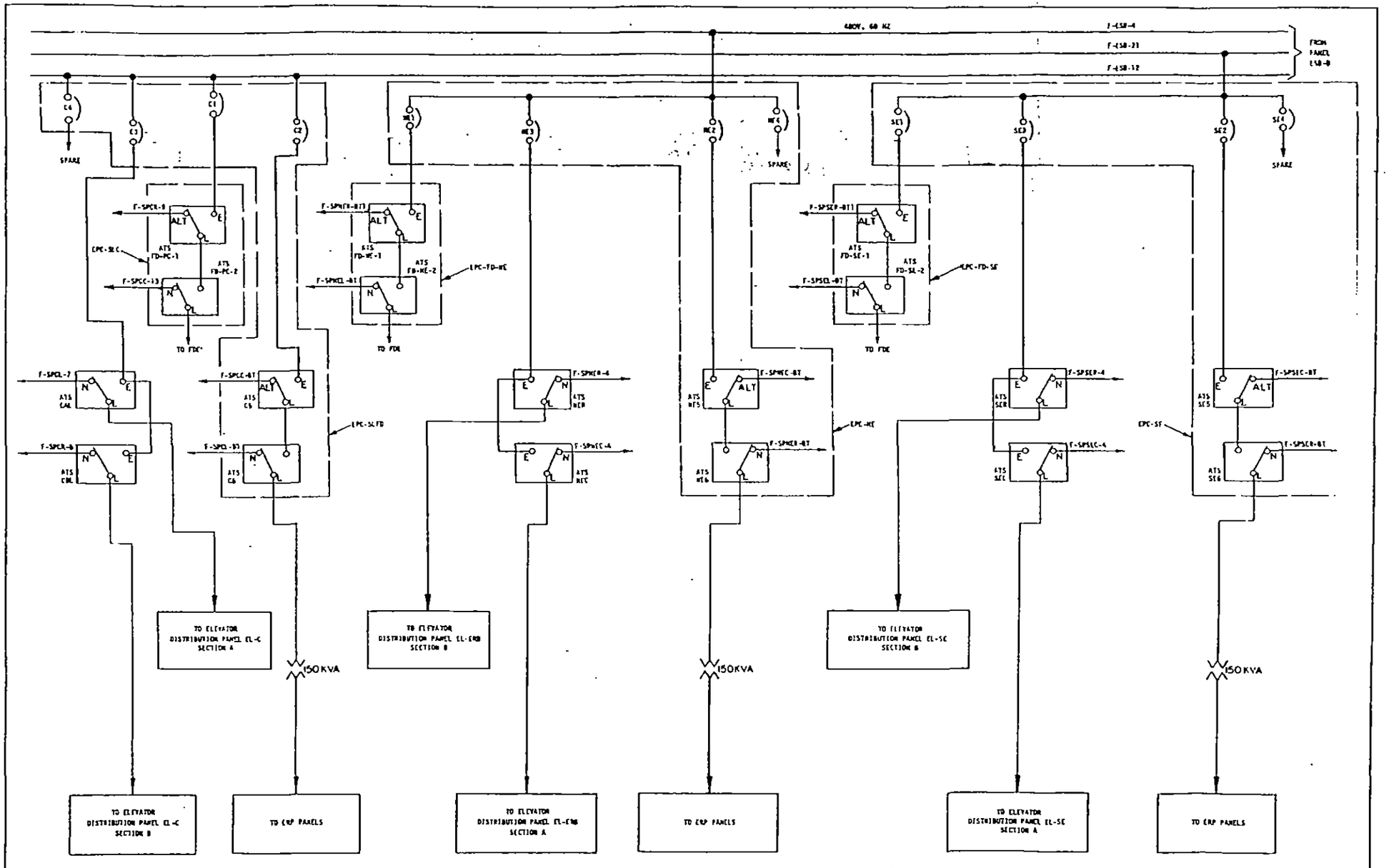

Figure 4.6 Emergency Power Centers (EPC)
NE & SE Plaza Buildings And U.S. Customhc

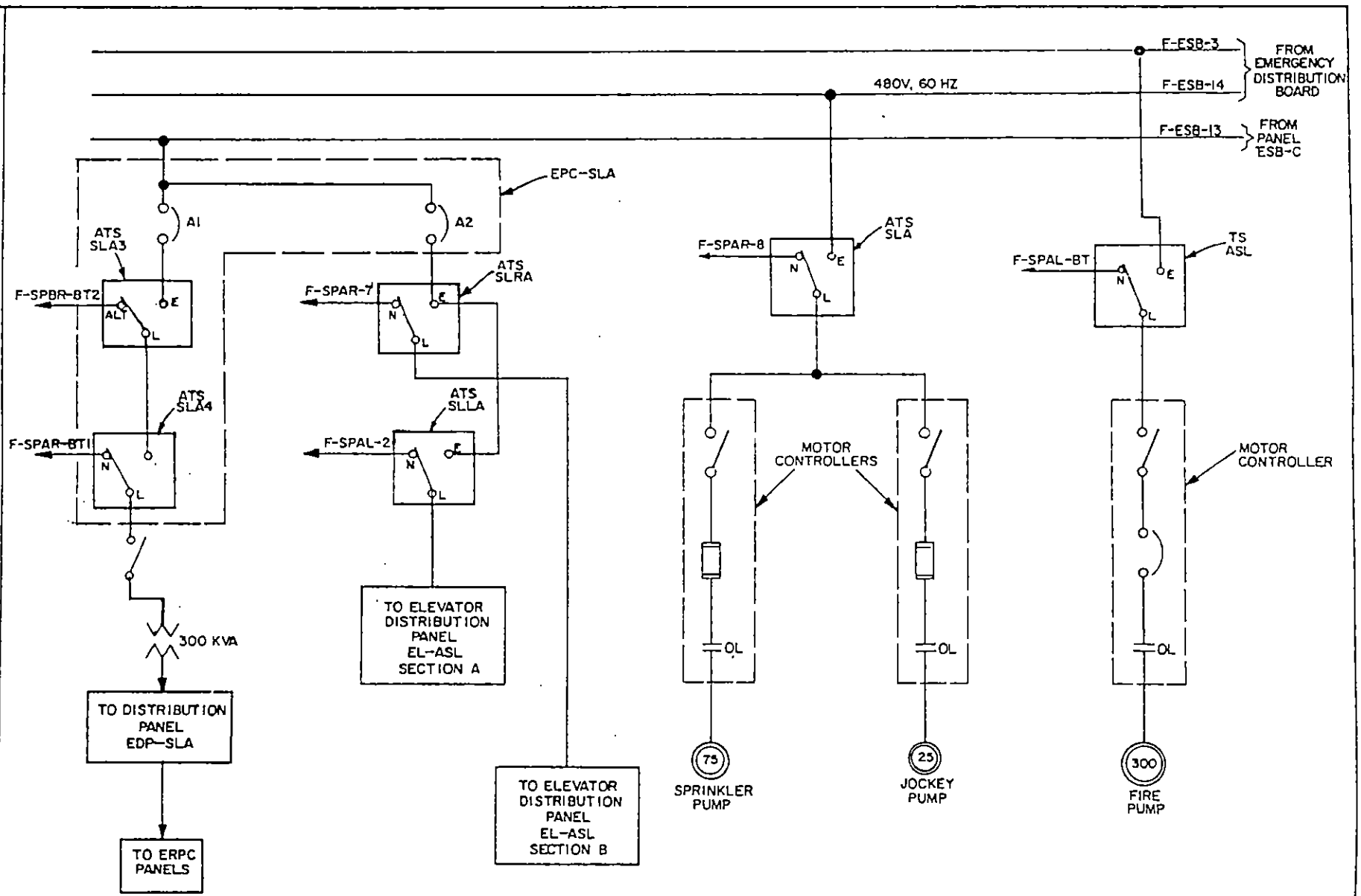

Figure 4.7 Emergency Power Center (EPC)

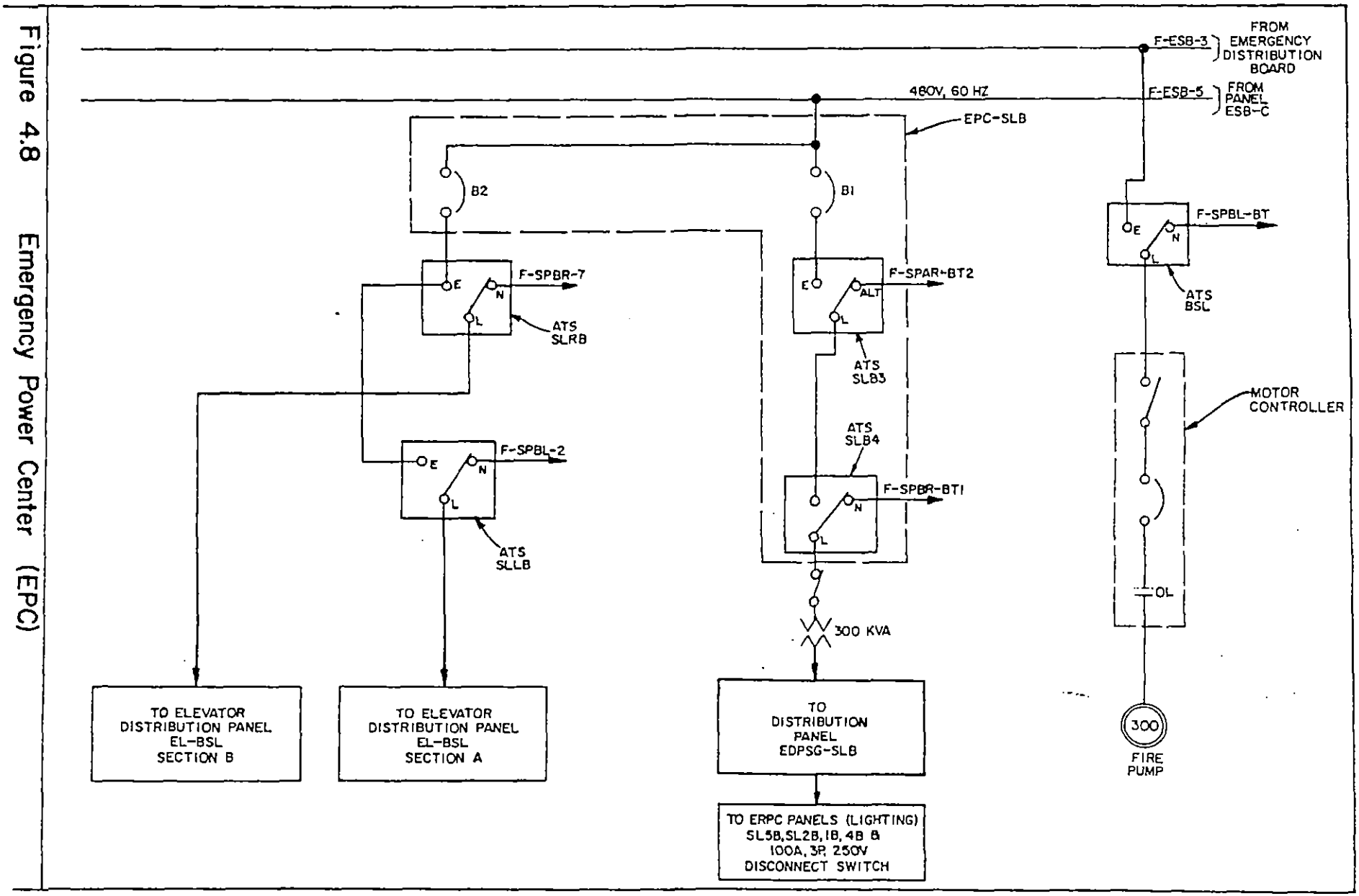

Figure 4.8 Emergency Power Center (EPC)